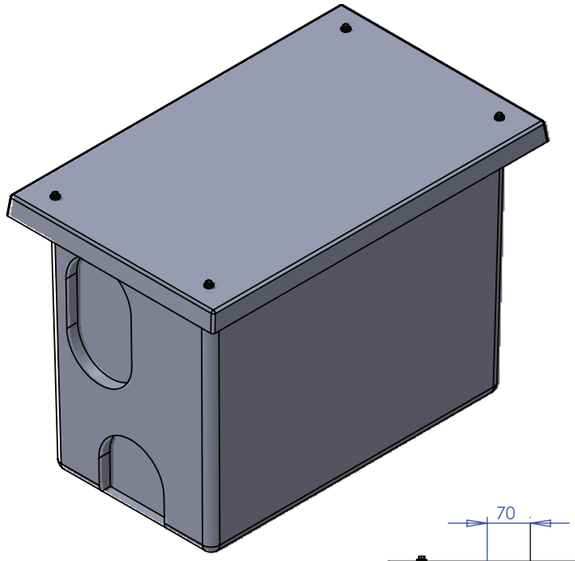

View 1

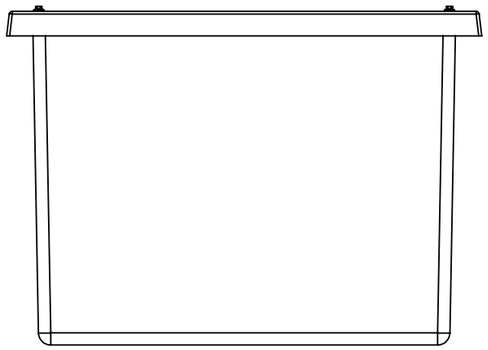

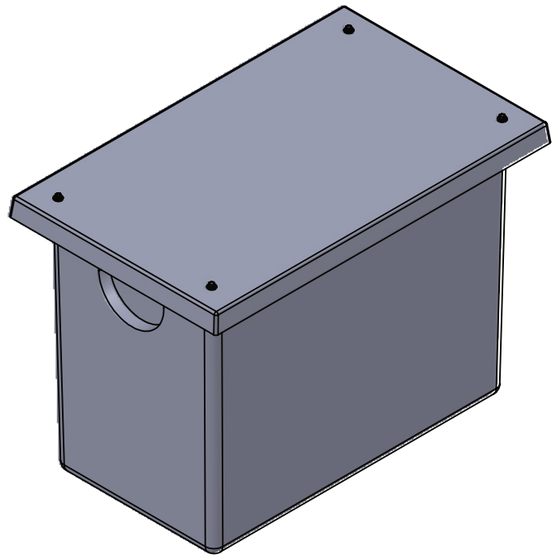

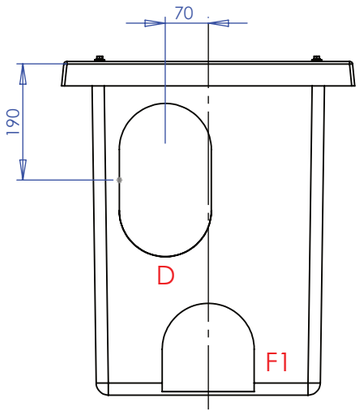

View 4

View 1

View 4

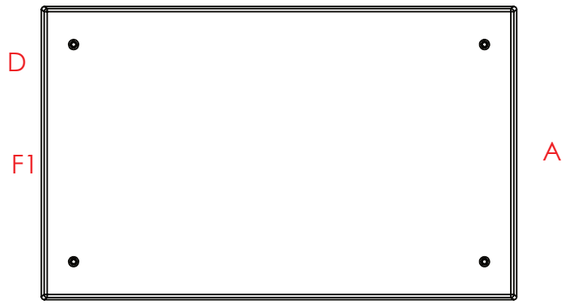

View 3

View 2

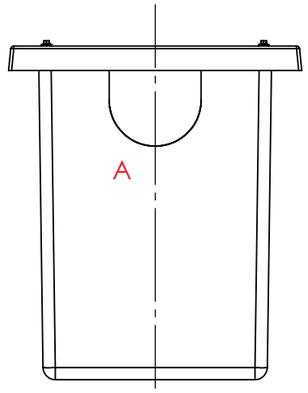

View 2

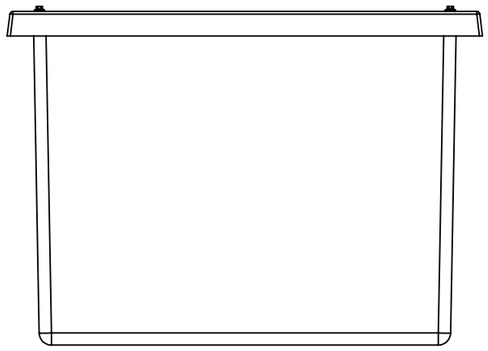

View 3

Connections:

A - Inlet	1 No pad T6, only.
B - Lid vent	
D - Overflow	1 No pad T2 , only.
F1 - Outlet	1 No pad T6, only.

Drawing Approval Date	
Name	
Signature	

I am signing to approve this drawing to progress my order in the build program. I accept that I cannot cancel this order following my signature of approval.

RUBBED DOWN BY	PRINT NAME

TITLE

STANDARD POSITIONS

DRAWN BY	DATE
C.LARKIN	25/03/2024

CUSTOMER

CUSTOMER

NOTE:
All tanks must be fully supported on a flat,level & continuous foundation providing structural support to the tank when full to maximum operating capacity.It is essential that the user refers to the conditions of installation document prior to the installation of the tank.Under no circumstances should the tank body be used to provide support to pipework and ancillary items. The tank lid is a structural part of the tank and must be in place and fitted correctly when water is contained within the tank.

ALL DIMENSIONS+/- 5mm
UNLESS OTHERWISE STATED

A3

DESCRIPTION:

PW90.AG

ALL DIMENSIONS IN MM - DO NOT SCALE

NOTES	
DATE	14/02/2023
FIRST ISSUE	xxx
VERSION	xxx

TANK SPECIFICATION :

INTERNAL DIMENSIONS	610 x 305 x 510mm
EXTERNAL DIMENSIONS	775 x 475 x 539mm
NOMINAL CAPACITY	90 Litres
INSULATION THICKNESS	25mm
STEEL BRACINGS	None
ENCAPSULATED BASEBOARD	None
TANK COLOUR	GREY - 00A05

TANKS DIRECT

SCALE:1:10

SHEET 1 OF 1